ARRL Periodicals Archive – Search Results

A membership benefit of ARRL and the ARRL Technical Information Service

ARRL Members: You may print a copy for personal use. Any other use of the information requires permission (see Copyright/Reprint Notice below).

Need a higher quality reprint or scan? Some of the scans contained within the periodical archive were produced with older imaging technology. If you require a higher quality reprint or scan, please contact the ARRL Technical Information Service for assistance. Photocopies are $3 for ARRL members, $5 for nonmembers. For members, TIS can send the photocopies immediately and include an invoice. Nonmembers must prepay. Details are available at www.arrl.org/tis or email photocopy@arrl.org.

QST on CD-ROM: Annual CD-ROMs are available for recent publication years. For details and ordering information, visit www.arrl.org/qst.

Non-Members: Get access to the ARRL Periodicals Archive when you join ARRL today at www.arrl.org/join. For a complete list of membership benefits, visit www.arrl.org/benefits.

QST Issue: Mar 2005
Title: M.C. Jones and the Micromatch
Author: John H. Dilks III, K2TQN

Click Here to Report a Problem with this File

OLD RADIO

M. C. Jones and the Micromatch

Since the beginning of radio, hams have searched for the ideal tuning indicator to help them get the maximum power from their transmitter to the antenna. Everything under the sun was tried, from the simple light bulb on a loop of wire, to large RF ammeters that would measure actual antenna (feed line) current.

I remember my first tuning indicator was the neon bulb in my Heathkit AC-1 antenna coupler. I tuned for maximum brightness. I had no idea what a standing wave was back then, other than it was a subject covered in the *ARRL Handbook*. The AC-1 and neon bulb worked okay; it must have, as I made some great contacts with only 7 W on a dipole. Then I received an Official Observer notice. That was when I learned that maximum brightness wasn't always good.

I called my mentor Bill Savell, W2LS, who was an OO and asked him what I was doing wrong. Bill came over with his Micromatch MM-1 and put it in series with my 300 Ω antenna lead-in. He then asked me to tune up my transmitter. That afternoon I learned how important it is to properly match an antenna to the transmitter.

I was unable to afford a Micromatch back then, but Bill helped me make a standing wave indicator with two pilot bulbs and two short pieces of 300 Ω line, taped to my lead-in. With the Micromatch still hooked up, I learned to tune for low SWR using the bulbs.

Bill also helped me construct a simple band-pass filter to eliminate harmonics on higher frequencies. I was all set then, and the rest of my Novice career was a lot of fun, with no more notices.

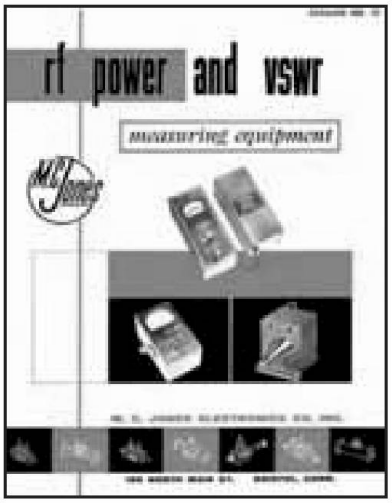

This is the 1957 catalog showing several products on the cover.

The Micromatch

Mack C. Jones, W1PNX, and his associate, inventor Carl Sontheimer, designed a device that would become well known in radio: the Micromatch. They wrote an extensive article about it in the April 1947 issue of *QST*. It would become the keystone product of the M. C. Jones Company for many years.

Hams built these and liked them. M. C. Jones started to produce and sell them commercially, and so began a long line of Micromatch devices. Many of these early units are still in ham shacks and are used every day.

The military found these devices indispensable and the M. C. Jones Company received many contracts. Numerous post WW-II transmitters had them built in. Jones designed a small coupler that could be built into the RF section. Then small coax leads brought the voltages out to the metering circuit on the front panel.

Model MM-1, the first commercial model M. C. Jones Micromatch.

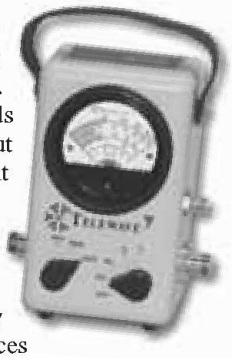

I have included several photos of M. C. Jones products for you to look at. They run from the early devices up to the ones built in the 1970s. There are also photos of similar devices that evolved from this design; many were as good or better. The Kenwood device shown in the photo allowed three couplers to be hooked into one display. These are ideal for today's multi-antenna ham shacks.

As time moved forward, other companies developed similar circuits. The Telewave portable test set is "typical" of another type of the same device. It allows radio technicians to carry the test set from job to job, to make the necessary adjustments without the manufacturers having to provide a permanent monitor in every radio. The Bird Company has similar test sets.

The M. C. Jones Company grew into a major RF-related company. They added other products to their line, such as dummy loads and lightning protective devices.

QST cover showing the original "Micromatch."

Circuit Diagram of the Micromatch Standing-wave Indicator

From the April 1947 QST *Article*

C1 - 3-15 -mmfd. midget variable.
C2 - 820 -mmfd. silver mica.
C3 - 0.0047 -mmfd. mica.
R1 - Special four-terminal 1 Ω 20-watt resistor.
R2 - 5000 Ω potentiometer.
MA - 0-1 d.c. milliammeter.
RFC1, RFC2 - 2.5-mh.- r.f. choke.

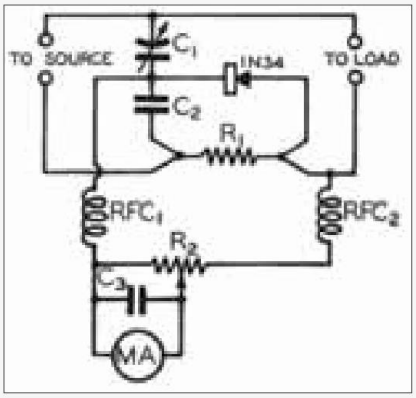

John Dilks, K2TQN ♦ 125 Wharf Rd, Egg Harbor Township, NJ 08234-8501 ♦ k2tqn@arrl.org

Modern SWR-wattmeter by Kenwood. Note three inputs for remote couplers on the rear.

This coupler was designed to be placed inside a transmitter. The small coax leads on top brings the voltages out to the metering circuit on the front panel.

Early version MM-1 with a coupler designed for 52 Ω coax.

Early wattmeter only, designed for use with 52 Ω coax.

This model was designed with a remote coupler that could be placed in the transmission line, with the indicator located near the operator.

Success brought competition. There were many lookalikes on the market, made by other companies. Many of them are still around. The Bird Company is one of the better known.

Almost every HF rig today comes with a built in SWR/wattmeter that functions very much like the Micromatch. You can also purchase a wide variety of similar antenna measurement products. Prices vary; an inexpensive SWR device may go for under $20, and ones with built-in microcomputers can run well over $1000. Modern computer-controlled automatic antenna tuners measure the SWR in much the same way; they just make all the tuning changes for you.

The 1947 *QST* article concluded with this thought, "After using the Micromatch for a few weeks, it doesn't seem possible that an amateur station could operate without it."

How true this has become.

Who Were Jones and Sontheimer?

All I could find about Jones was that he was a ham and owned the company in Rhode Island. That company does not exist today under the Jones name; I suspect another company must have acquired it.

Carl Sontheimer, on the other hand, was well known but not, that I could find, a ham. He was an inventor. After graduating from MIT he invented a number of technical devices; ours was one of them. He was best known back then for inventing a microwave direction finder for NASA that was used on an Apollo moon mission. By the end of the 1960s, Sontheimer had founded and made successful an engineering company, which he later sold.

During retirement, in 1971, he decided to combine his technology expertise with his longtime love of cooking, and returned to his birth-country, France, for inspiration. At a cooking show, he discovered an elaborate industrial blender, which he thought could be adapted for use in the home. In 1973 he introduced the famous "Cuisinart" food processor. He later sold this company for $42 million.

Carl G. Sontheimer died in March 1998 at the age of 83. To honor him, MIT's Mechanical Engineering Department created the Carl G. Sontheimer Prize for Excellence in Innovation and Creativity in Design.

I've provided a lot of photos to my editor for this column. I'll place those that won't fit in the magazine on my Web page, **www.eht.com/oldradio/arrl/index.html**.

If you know anything about Mack C. Jones, please let me know.—*K2TQN*